TECHNICAL DATA

Product type	Reverse osmosis watermaker
Application	Seawater for nautical application
Production	150 l/h ±15% (39,6 gal/h ±15%) @35 ppm and 25 °C
Membranes	2x Membrane SW-4021
Rejection	99,5% (nominal)
Power supply	24 V ±15% DC 48 V ±15% DC 110 V ±15% AC - 60 Hz 230 V ±15% AC - 50/60 Hz
Absorption - Power required	25 A ±15% - 600 W ±15% (24 V) 13 A ±15% - 600 W ±15% (48 V) 6 A ±15% - 700 W ±15% (110 V) 3 A ±15% - 700 W ±15% (230 V)
Pump	Rotary pump
Pressure pump	10 - 11 bar
Flow rate pump	15,6 – 16,6 l/min
Water inlet temperature range	8 - 30 °C
Pre-filtration	1x 5micron filter 10”x2-1/2” 1x Active carbon filter 2-7/8" x 9-3/4"
Weight	62 kg
Shipping dimensions	88x64x69 cm

HYDRAULIC CONNECTIONES

PUMP / FILTERS / NR VALVE

Seawater inlet	Hose barb DN20/22 - DN20
Seawater outlet	Hose barb DN20/22 - DN20

WATERMAKER

Seawater inlet	Hose barb DN20/22
Concentrated water outlet	Hose barb DN16
Fresh water outlet	Compressor fitting 1/4” for hose 6x8

CONTROL SYSTEM AND OPTIONAL DEVICES

Electronics	Basic / Minitouch / Touch
Automatic flushing	Standard
Safety control	High/low pressure Low voltage
Salinity monitoring	N.A. (Basic) / Optional (Touch)

COMPONENTS

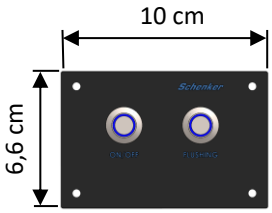

CONTROL PANEL (BASIC)
Depth: 3,2 cm
Cut dimensions: 7,6x4,4 cm

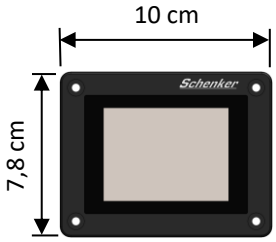

CONTROL PANEL (MINITOUCH)
Depth: 3,2 cm
Cut dimensions: 7,9x5,6 cm

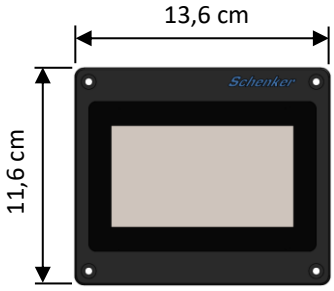

CONTROL PANEL (TOUCH)
Depth: 3,2 cm
Cut dimensions: 11x8,8 cm

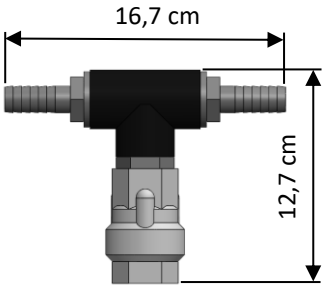

NON-RETURN VALVE
Depth: 4,7 cm

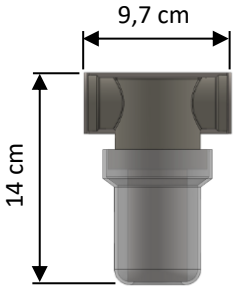

MESH FILTER GROUP
Depth: 9,1 cm

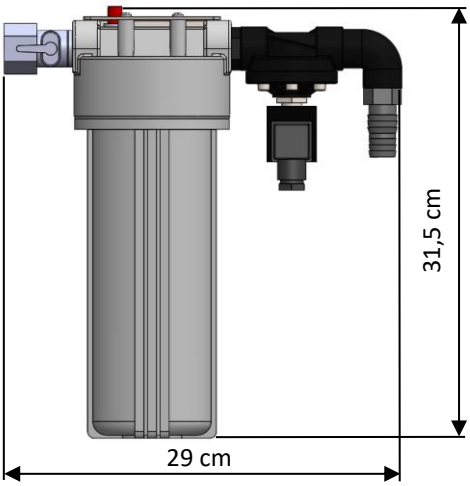

ACTIVE CARBON FILTER GROUP
Depth: 12,8 cm

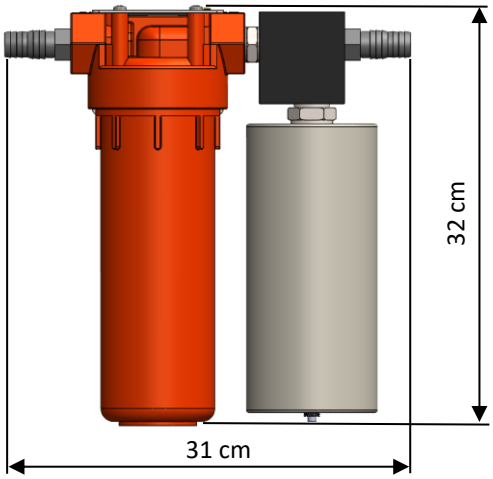

5 MICRON FILTER GROUP
Depth: 11,3 cm

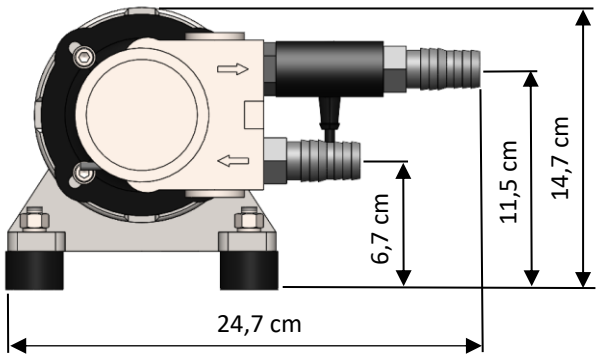

PUMP GROUP 24/48V
Depth: 41,2 cm - Weight: 12,7 kg

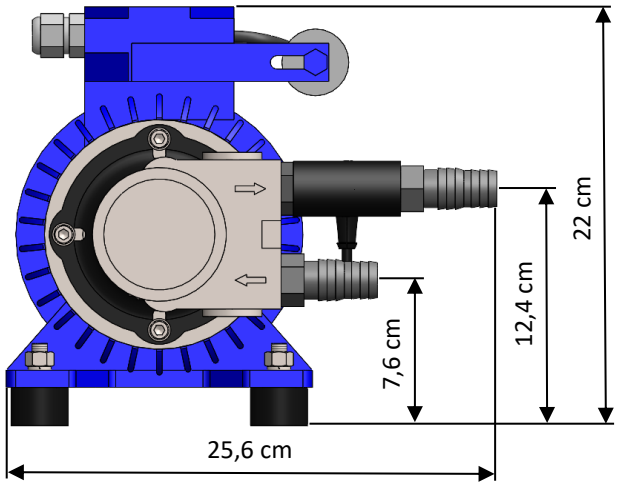

PUMP GROUP 230V
Depth: 43,2cm – Weight: 12,1kg

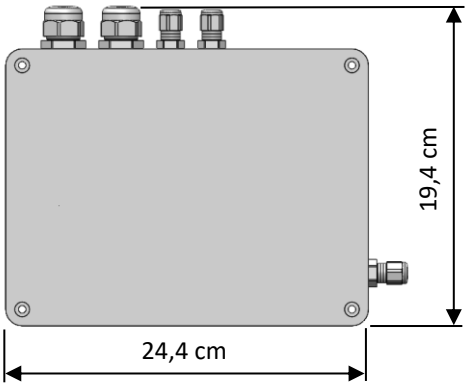

ELECTRICAL PUMP BOX
Depth: 10,6 cm

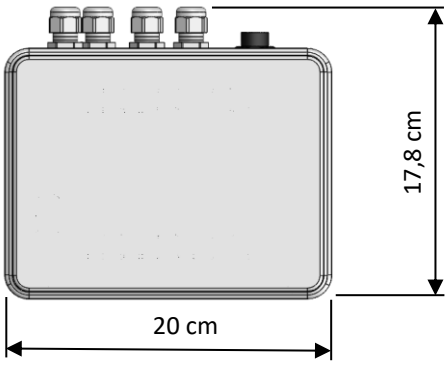

COMPUTER BOX (TOUCH)
Depth: 8 cm

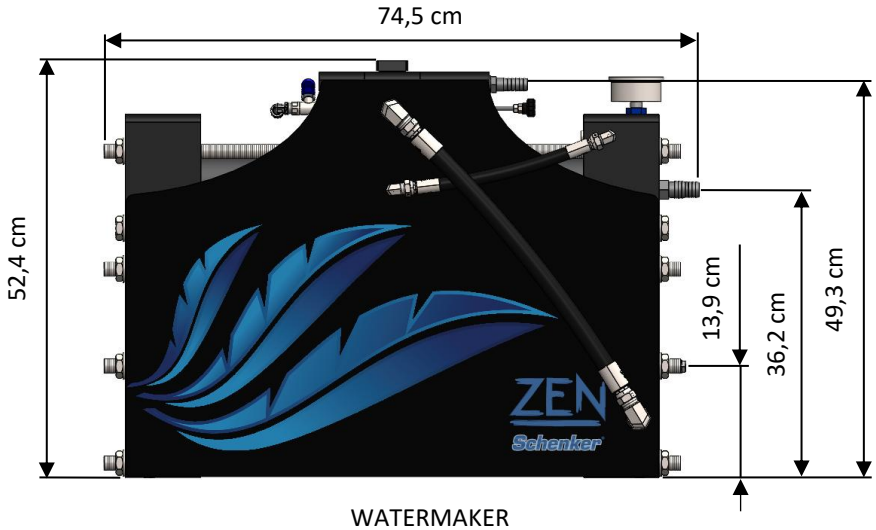

WATERMAKER
Depth: 19,6 cm - Weight: 47,9 kg

INSTALLATION SCHEME

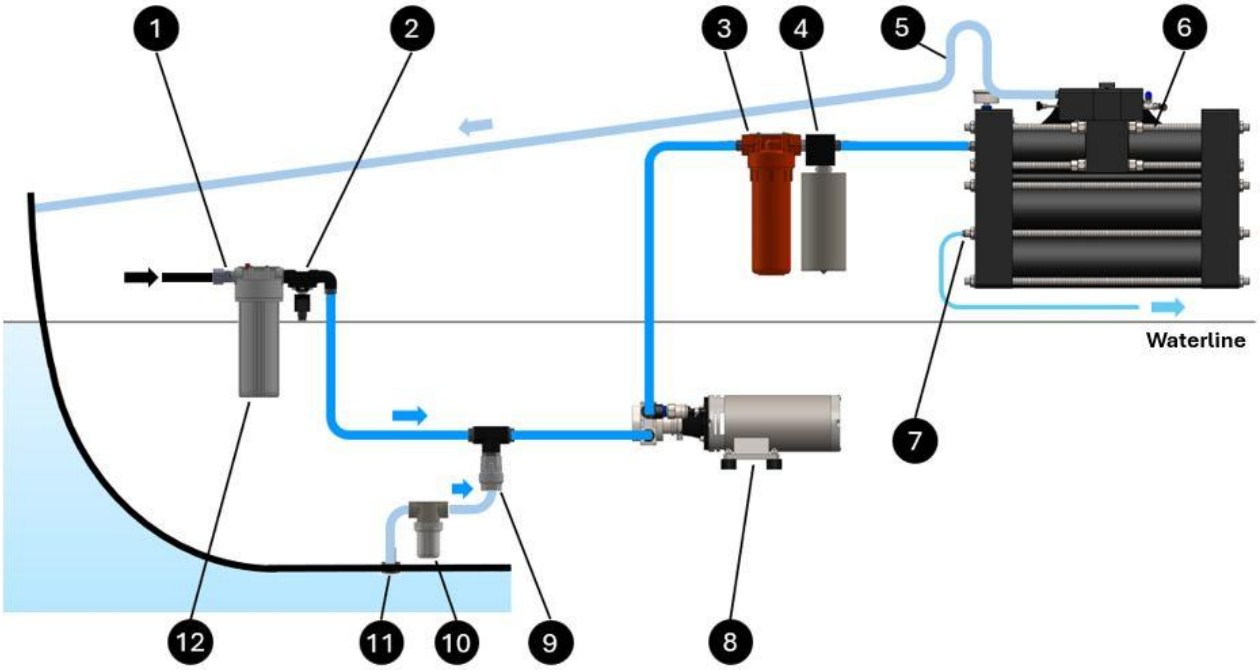

1	Pressurized fresh water valve	**7**	Fresh water outlet
2	Electrovalve	**8**	Pump
3	5 micron filter	**9**	Non return valve
4	Accumulator	**10**	Mesh filter
5	Swan neck upwater - Discharge	**11**	Sea water inlet
6	Watermaker	**12**	Active carbon filter

Postadress:
TRÄDGÅRDSTEKNIK AB
Helsingborgsvägen 578, Varalöv
262 96 ÄNGELHOLM

Telefon : 0431-222 90
Bg.nr : 5743-7980
Org.nr : 556409-6120

URL:
www.tradgardsteknik.se
E-postadress:
info@tradgardsteknik.se